# Standard Side Table - Lumber Layout

**Top** from FULL 16" and 48" 2x4s:
glue and cut to 12 x 15"

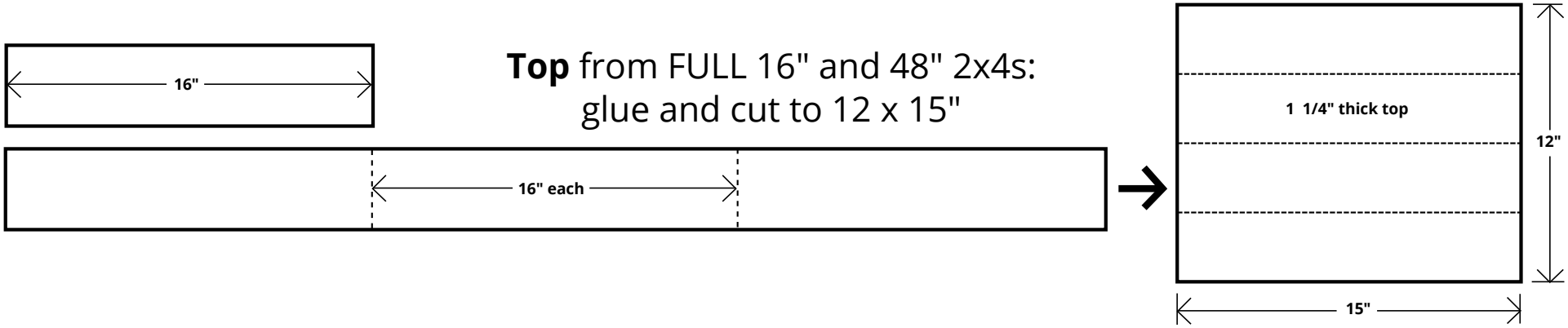


**Lower shelf** from a RESAWN 48" 2x4:
glue up and cut to 9 x 12"

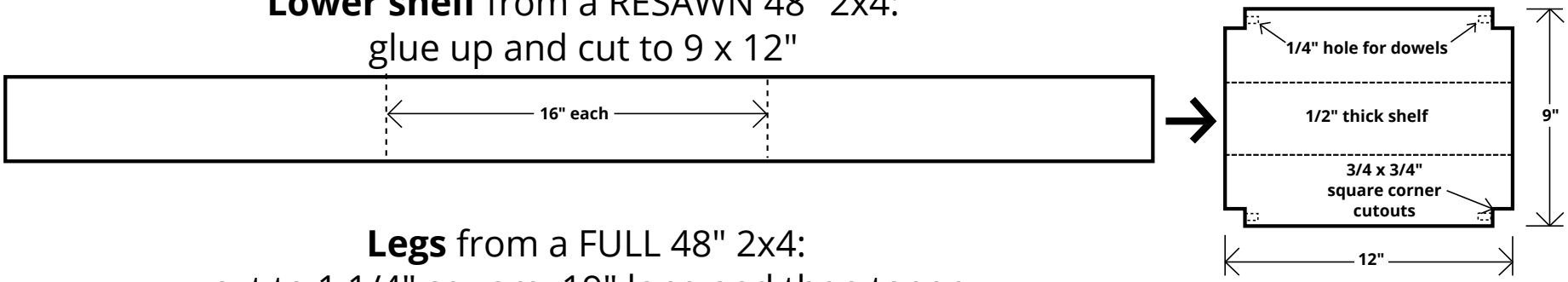


**Legs** from a FULL 48" 2x4:
cut to 1 1/4" square, 19" long and then taper

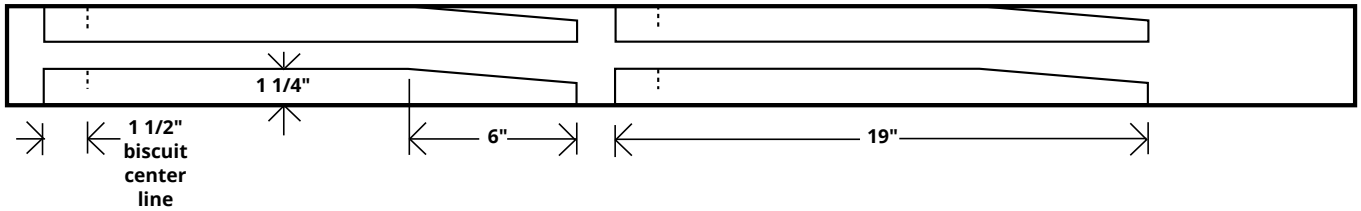

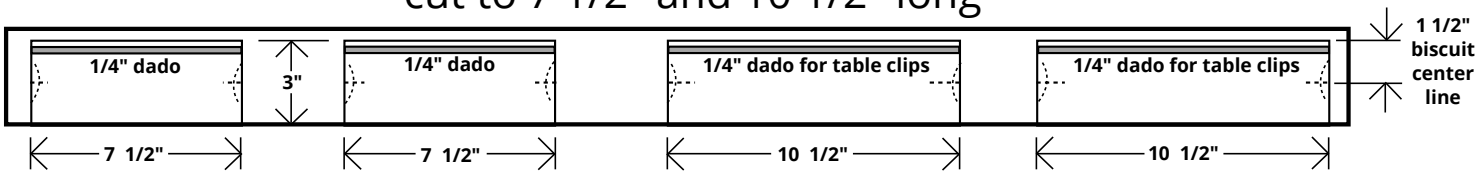
**Skirt** from a RESAWN 48" 2x4:
cut to 7 1/2" and 10 1/2" long